Van de Lande

# 3.75 2/3 Beregeningskoppeling

## Productinformatie

**Eigenschappen**
- Recht
- Getrompt

**Materiaal**
- PVC-U = Polyvinylchloride zonder weekmaker

**Afdichting**
- EPDM

**Vervaardiging**
- Spuitgiet

## Onderdelen

8.06 O-ring voor beregeningskoppeling

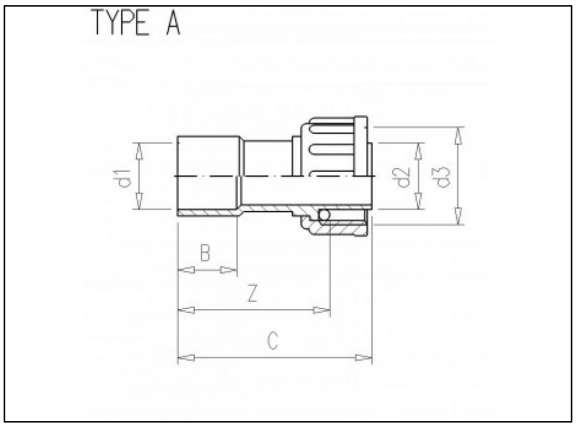


## Beschikbare artikelen

| ART.CODE | d1 | d2 | d3 | Z | B | C | Type | PN | Verp |
|---|---|---|---|---|---|---|---|---|---|
| 3.75.030 | 32 | 32 | 1 1/4 (F) | 73 | 32 | 90 | A | 7.5 | 250 |
| 3.75.035 | 32 | 32 | 1 1/4 (F) | 73 | 57 | 90 | B | 7.5 | 250 |

**Van de Lande BV**
Lissenveld 1 \ 4941 VK Raamsdonksveer \ The Netherlands \ t +31 (0)162 51 60 00 \ f +31 (0)162 52 14 17 \ sales@vandelande.com
Traderegister Tilburg: 18070844 \ IBAN: NL13 RABO 0143 0035 26 \ BIC: RABONL2U \ VAT:NL 8123.91.755.B01

www.vandelande.com

All our transactions are subject to the Van de Lande General Terms of Sale. A copy of these can be provided immediately upon your request.